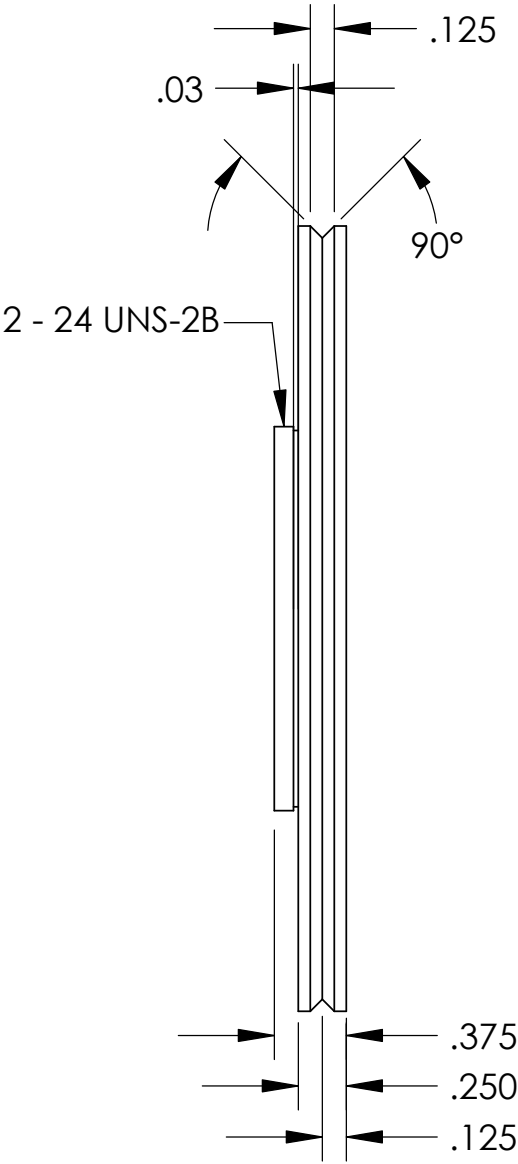
.125
.03
90°
2 - 24 UNS-2B
.375
.250
.125