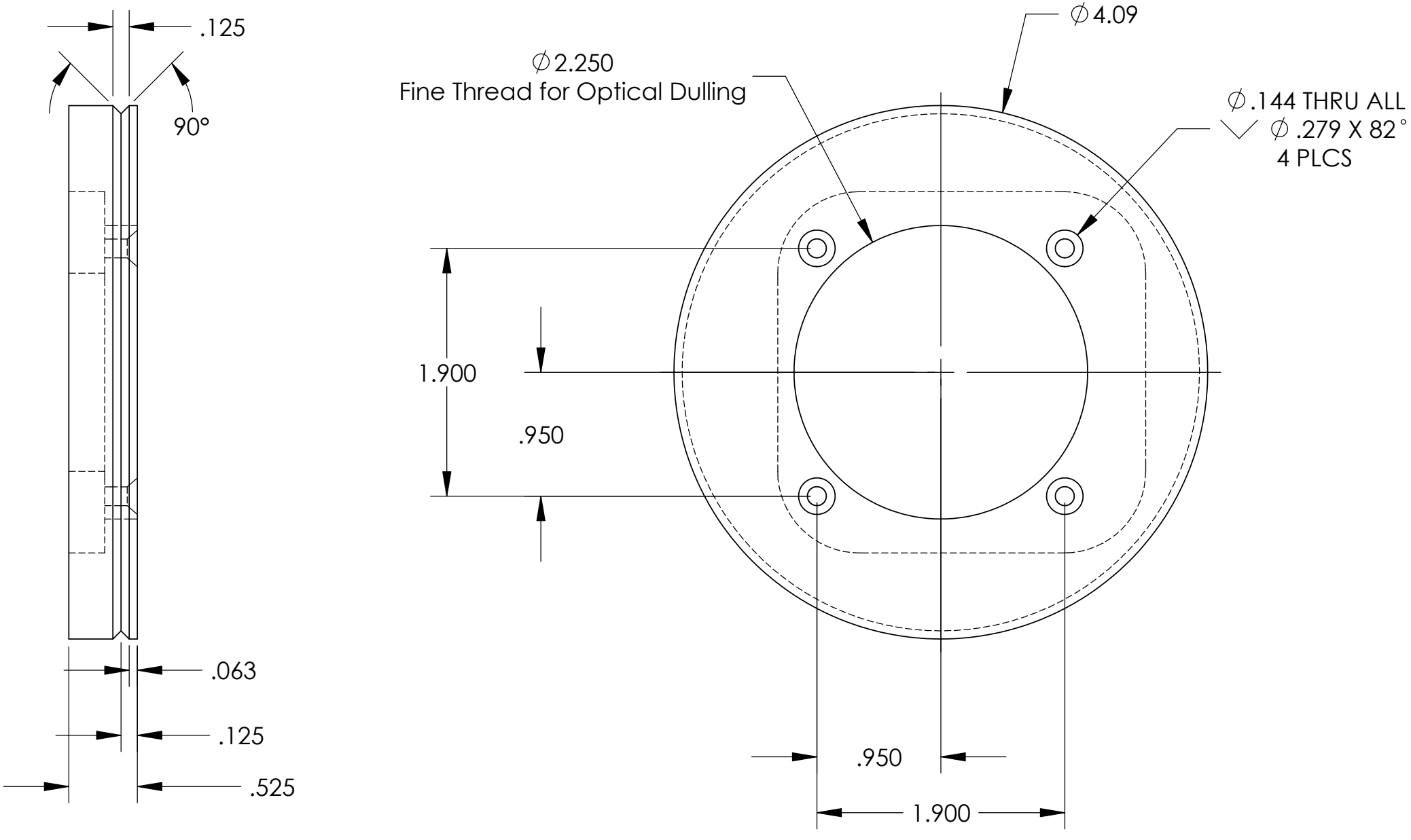
.125
90°
.063
.125
.525
∅4.09
∅2.250
Fine Thread for Optical Dulling
∅.144 THRU ALL
∅ .279 X 82°
4 PLCS
1.900
.950
.950
1.900